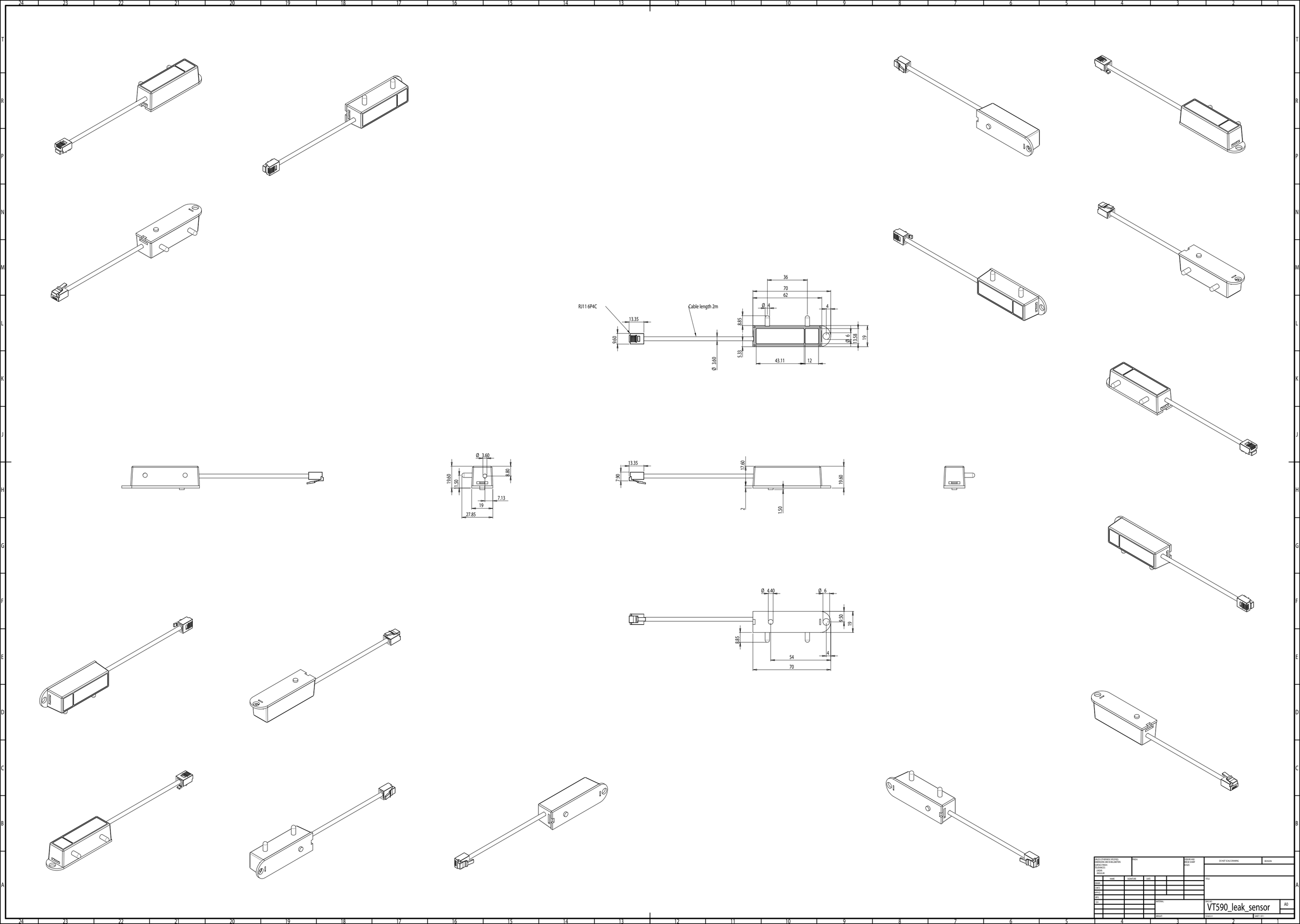

UNLESS OTHERWISE SPECIFIED: DIMENSIONS ARE IN MILLIMETERS. SURFACE FINISH: TOLERANCES: LINEAR: ANGULAR:		FINISH:		DEBURR AND BREAK SHARP EDGES:	DO NOT SCALE DRAWING		REVISION:
	NAME	SIGNATURE	DATE		TITLE:		
DRAWN							
CHK'D							
APPV'D							
MFG							
Q.A				MATERIAL:	DWG NO: VT590_leak_sensor		A0
				WEIGHT:	SCALE:2:1	SHEET 1 OF 1	